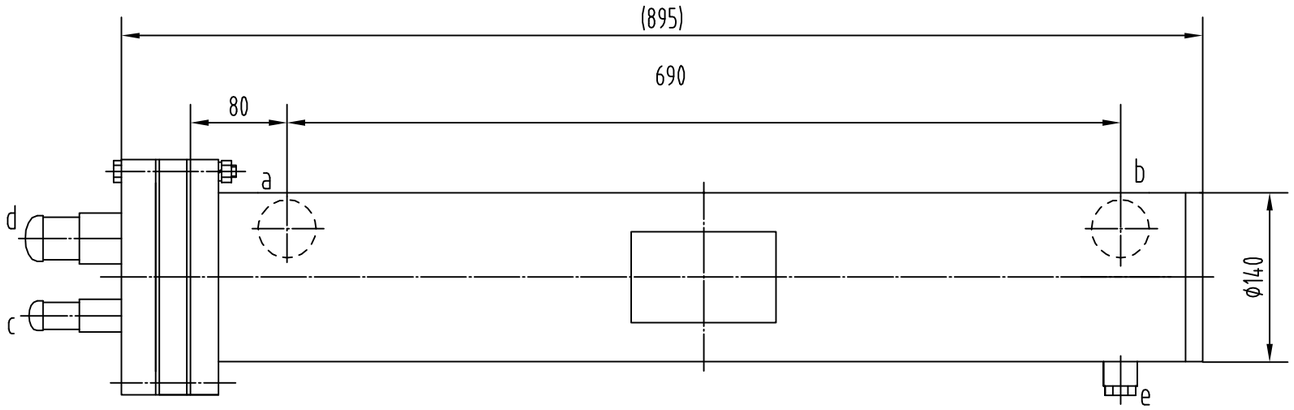

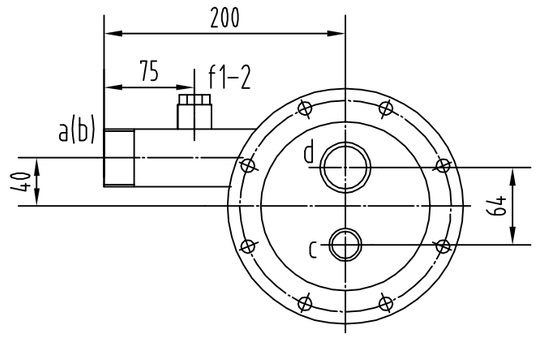

Table Of Pipe Connection				
No.	Intendedsize	Connection Standards	Joint face	Remart
a	Rp1-1/2	GB/T7306.1-2000	Outside thread	Water Inlet
b	Rp1-1/2	GB/T7306.1-2000	Outside thread	Water Outlet
c	Φ12 1/2"	/	welded	R22 Inlet
d	Φ22 7/8"	/	welded	R22 Outlet
e	Rc1/2	GB/T7306.2-2000	Internal thread	Drain
f1-2	Rc3/8	GB/T7306.2-2000	Internal thread	Senser

Design Parameter		
	Pipe Side	Shell Side
Design pressure MPa	1.4	1.0
Design Temperature ℃	38	60
Heat Exchange Area m^2	1.44	
Number Of Passes	2	1
Material	Q235-B、T2、20	
Pressure-Tight Test MPa	1.61	1.15

Design Standards
1.JB/T4750-2003《Specification for Refrigeration pressure vessel》
2.1999《safety-supervision regulation of pressure vessel》
3.JB/T4709-2000《Specification for steel pressure vessels》

Drawing

U18S5

1:5

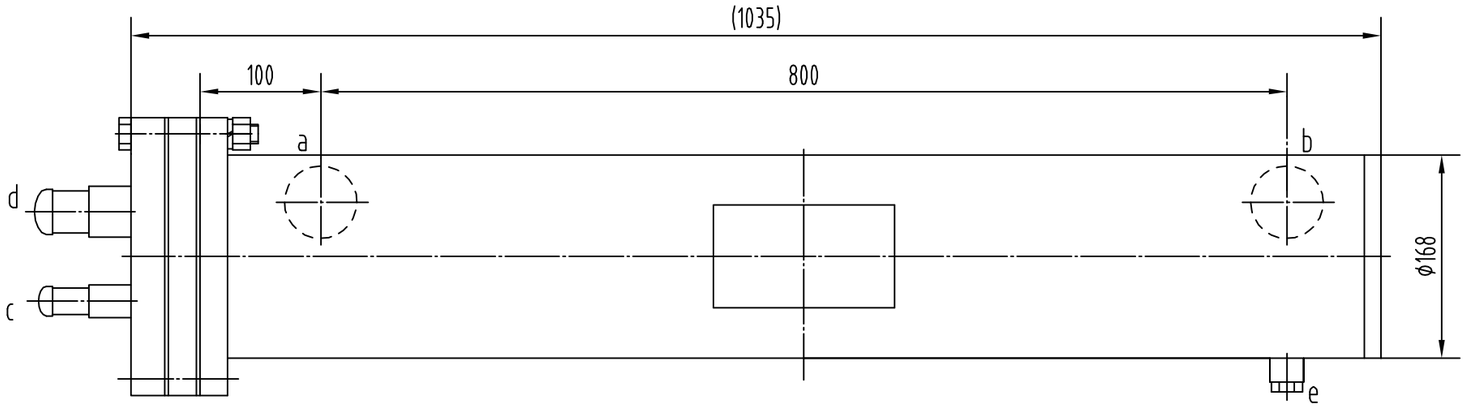

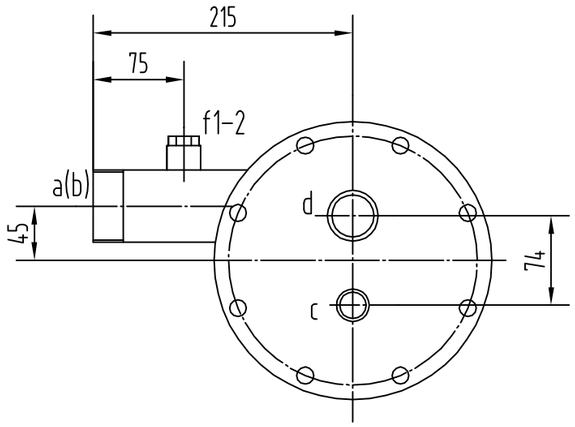

Table Of Pipe Connection				
No.	Intendedsize	Connection Standards	Joint face	Remart
a	Rp2	GB/T7306.1-2000	Outside thread	Water Inlet
b	Rp2	GB/T7306.1-2000	Outside thread	Water Outlet
c	φ16 5/8"	/	welded	R22 Inlet
d	φ28 1-1/8"	/	welded	R22 Outlet
e	Rc1/2	GB/T7306.2-2000	Internal thread	Drain
f1-2	Rc3/8	GB/T7306.2-2000	Internal thread	Senser

Design Parameter		
	Pipe Side	Shell Side
Design pressure MPa	1.4	1.0
Design Temperature ℃	38	60
Heat Exchange Area m^2	2.1	
Number Of Passes	2	1
Material	Q235-B、T2、20	
Pressure-Tight Test MPa	1.61	1.15

Design Standards
1.JB/T4750-2003《Specification for Refrigeration pressure vessel》
2.1999《safety-supervision regulation of pressure vessel》
3.JB/T4709-2000《Specification for steel pressure vessels》

DRAWING

U28S6

1:5

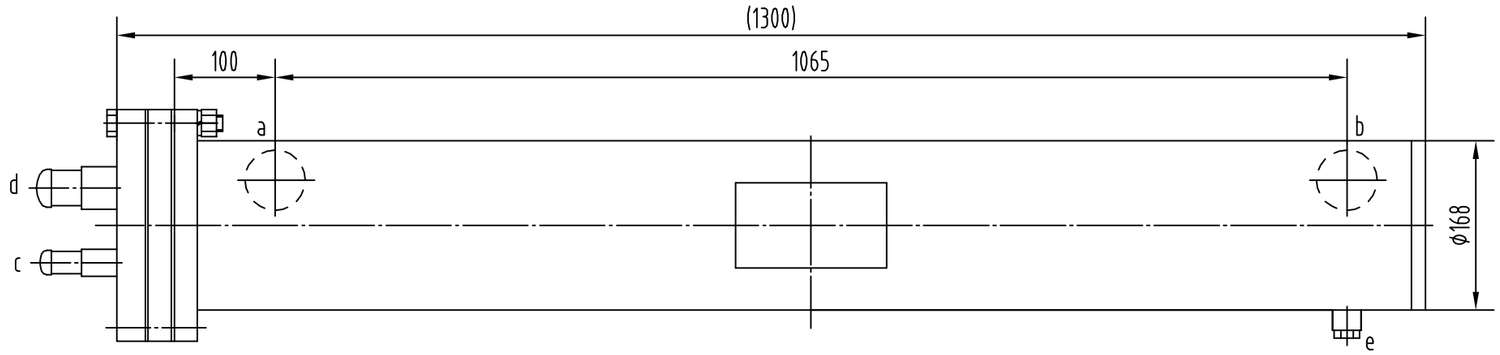

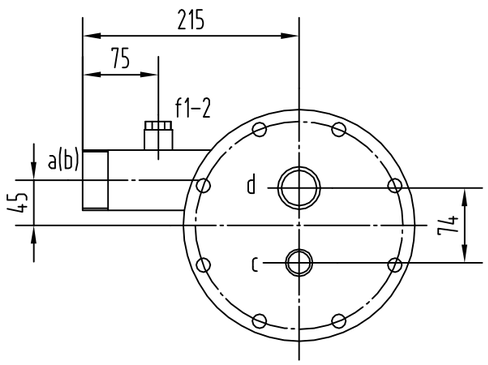

Table Of Pipe Connection				
No.	Intendedsize	Connection Standards	Joint face	Remart
a	Rp2	GB/T7306.1-2000	Outside thread	Water Inlet
b	Rp2	GB/T7306.1-2000	Outside thread	Water Outlet
c	ϕ16 5/8"	/	welded	R22 Inlet
d	ϕ35 1-3/8"	/	welded	R22 Outlet
e	Rc1/2	GB/T7306.2-2000	Internal thread	Drain
f1-2	Rc3/8	GB/T7306.2-2000	Internal thread	Senser

Design Parameter		
	Pipe Side	Shell Side
Design pressure MPa	1.4	1.0
Design Temperature ℃	38	60
Heat Exchange Area m^2	2.75	
Number Of Passes	2	1
Material	Q235-B、T2、20	
Pressure-Tight Test MPa	1.61	1.15

Design Standards
1.JB/T4750-2003《Specification for Refrigeration pressure vessel》
2.1999《safety-supervision regulation of pressure vessel》
3.JB/T4709-2000《Specification for steel pressure vessels》

DRAWING

U35S6

1:5

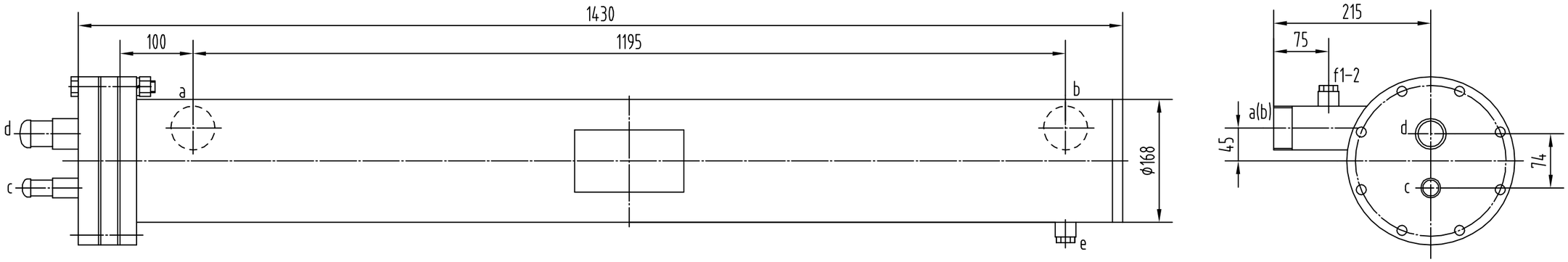

Table Of Pipe Connection				
No.	Intendedsize	Connection Standards	Joint face	Remart
a	Rp2	GB/T7306.1-2000	Outside thread	Water Inlet
b	Rp2	GB/T7306.1-2000	Outside thread	Water Outlet
c	ϕ16 5/8"	/	welded	R22 Inlet
d	ϕ42 1-5/8"	/	welded	R22 Outlet
e	Rc1/2	GB/T7306.2-2000	Internal thread	Drain
f1-2	Rc3/8	GB/T7306.2-2000	Internal thread	Senser

Design Parameter		
	Pipe Side	Shell Side
Design pressure MPa	1.4	1.0
Design Temperature ℃	38	60
Heat Exchange Area m^2	3.65	
Number Of Passes	2	1
Material	Q235-B、T2、20	
Pressure-Tight Test MPa	1.61	1.15

Design Standards
1.JB/T4750-2003《Specification for Refrigeration pressure vessel》
2.1999《safety-supervision regulation of pressure vessel》
3.JB/T4709-2000《Specification for steel pressure vessels》

DRAWING

U47S6

1:5

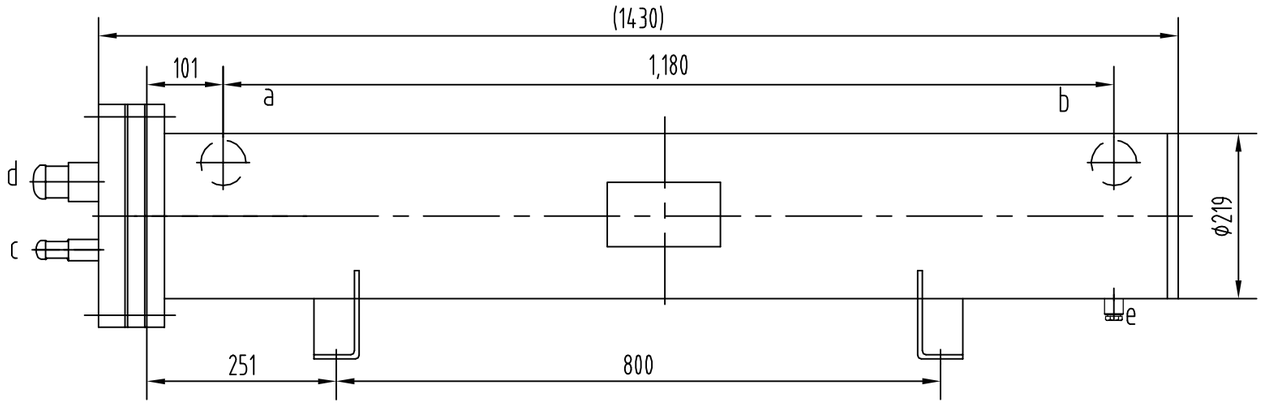

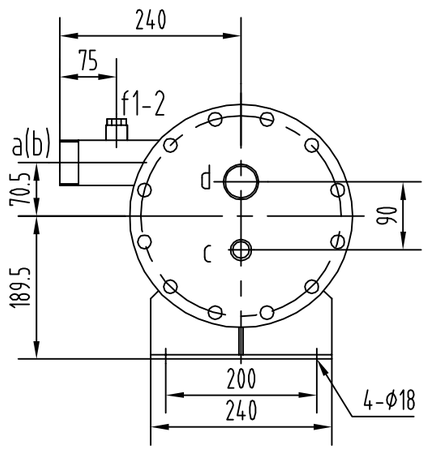

Table Of Pipe Connection				
No.	Intendedsize	Connection Standards	Joint face	Remart
a	Rp2	GB/T7306.1-2000	Outside thread	Water Inlet
b	Rp2	GB/T7306.1-2000	Outside thread	Water Outlet
c	Φ22 7/8"	/	welded	R22 Inlet
d	Φ42 1-5/8"	/	welded	R22 Outlet
e	Rc1/2	GB/T7306.2-2000	Internal thread	Drain
f1-2	Rc3/8	GB/T7306.2-2000	Internal thread	Senser

Design Parameter		
	Pipe Side	Shell Side
Design pressure MPa	1.4	1.0
Design Temperature ℃	38	60
Heat Exchange Area m^2	4.42	
Number Of Passes	2	1
Material	Q235-B、T2、20	
Pressure-Tight Test MPa	1.61	1.15

Design Standards
1.JB/T4750-2003《Specification for Refrigeration pressure vessel》
2.1999《safety-supervision regulation of pressure vessel》
3.JB/T4709-2000《Specification for steel pressure vessels》

DRAWING

U56S8

1:5

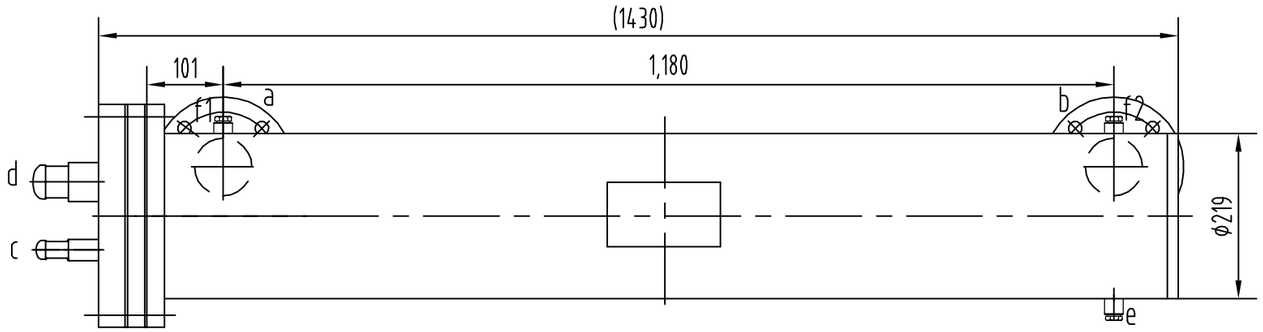

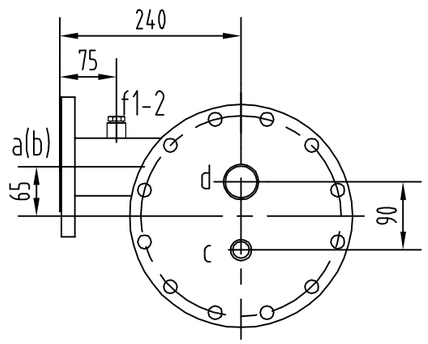

Table Of Pipe Connection				
No.	Intendedsize	Connection Standards	Joint face	Remart
a	PL65-1.6	HG20592-97	RF	Water Inlet
b	PL65-1.6	HG20592-97	RF	Water Outlet
c	φ22 7/8"	/	welded	R22 Inlet
d	φ54 2-1/8"	/	welded	R22 Outlet
e	Rc1/2	GB/T7306.2-2000	Internal thread	Drain
f1-2	Rc3/8	GB/T7306.2-2000	Internal thread	Senser

Design Parameter		
	Pipe Side	Shell Side
Design pressure MPa	1.4	1.0
Design Temperature ℃	38	60
Heat Exchange Area m^2	5.17	
Number Of Passes	2	1
Material	Q235-B、T2、20	
Pressure-Tight Test MPa	1.61	1.15

Design Standards
1.JB/T4750-2003《Specification for Refrigeration pressure vessel》
2.1999《safety-supervision regulation of pressure vessel》
3.JB/T4709-2000《Specification for steel pressure vessels》

DRAWING

U65S8

1:5

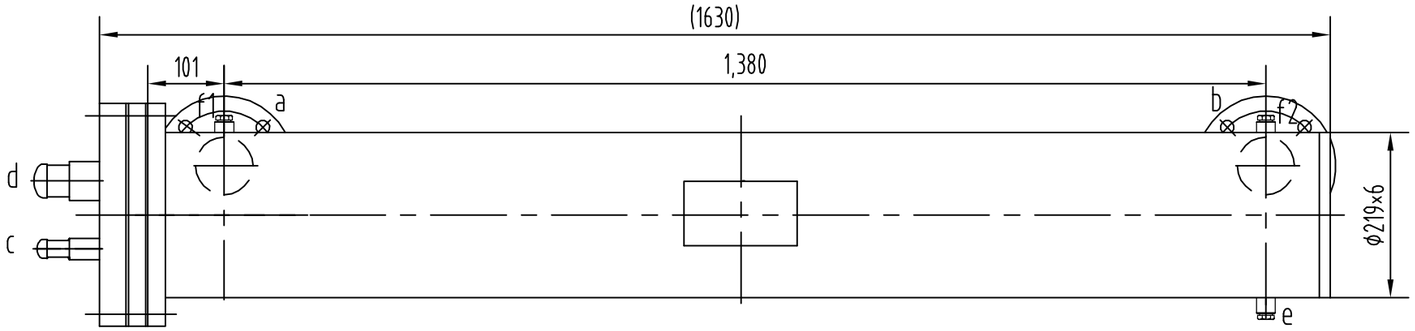

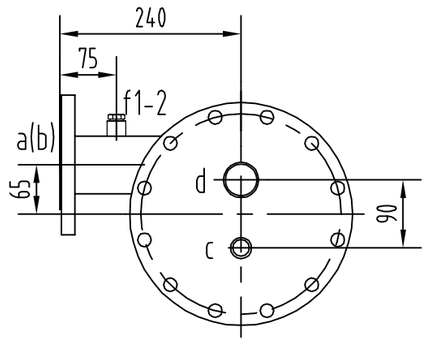

Table Of Pipe Connection				
No.	Intendedsize	Connection Standards	Joint face	Remart
a	PL65-1.6	HG20592-97	RF	Water Inlet
b	PL65-1.6	HG20592-97	RF	Water Outlet
c	ϕ22 7/8"	/	welded	R22 Inlet
d	ϕ54 2-1/8"	/	welded	R22 Outlet
e	Rc1/2	GB/T7306.2-2000	Internal thread	Drain
f1-2	Rc3/8	GB/T7306.2-2000	Internal thread	Senser

Design Parameter		
	Pipe Side	Shell Side
Design pressure MPa	1.4	1.0
Design Temperature ℃	38	60
Heat Exchange Area m^2	6.82	
Number Of Passes	2	1
Material	Q235-B、T2、20	
Pressure-Tight Test MPa	1.61	1.15

Design Standards
1.JB/T4750-2003《Specification for Refrigeration pressure vessel》
2.1999《safety-supervision regulation of pressure vessel》
3.JB/T4709-2000《Specification for steel pressure vessels》

DRAWING

U80S8

1:5

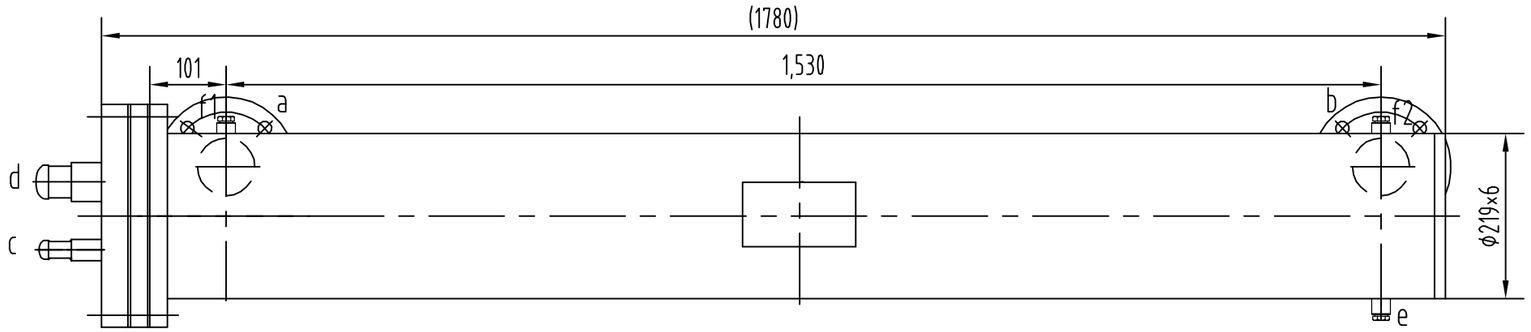

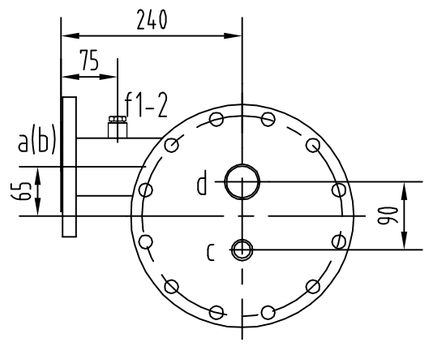

Table Of Pipe Connection				
No.	Intendedsize	Connection Standards	Joint face	Remart
a	PL65-1.6	HG20592-97	RF	Water Inlet
b	PL65-1.6	HG20592-97	RF	Water Outlet
c	φ22 7/8"	/	welded	R22 Inlet
d	φ54 2-1/8"	/	welded	R22 Outlet
e	Rc1/2	GB/T7306.2-2000	Internal thread	Drain
f1-2	Rc3/8	GB/T7306.2-2000	Internal thread	Senser

Design Parameter		
	Pipe Side	Shell Side
Design pressure MPa	1.4	1.0
Design Temperature ℃	38	60
Heat Exchange Area m^2	7.9	
Number Of Passes	2	1
Material	Q235-B、T2、20	
Pressure-Tight Test MPa	1.61	1.15

Design Standards
1.JB/T4750-2003《Specification for Refrigeration pressure vessel》
2.1999《safety-supervision regulation of pressure vessel》
3.JB/T4709-2000《Specification for steel pressure vessels》

DRAWING

U95S8

1:5

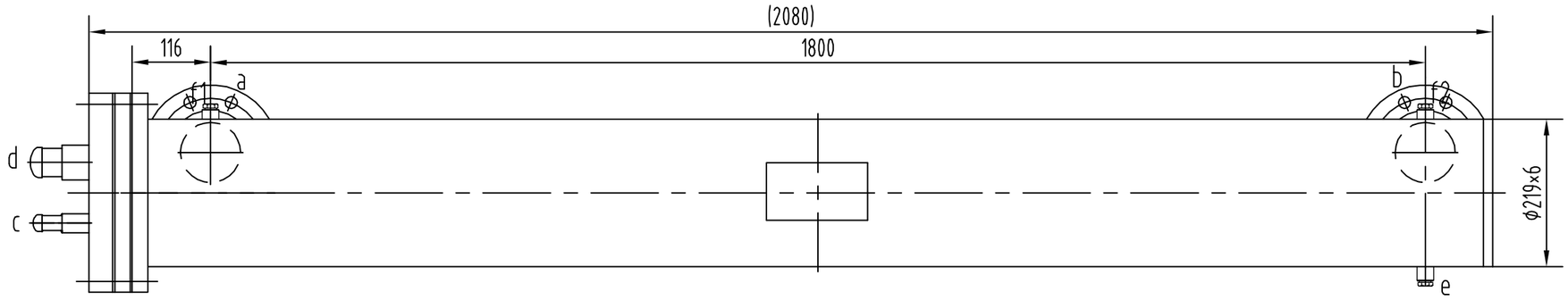

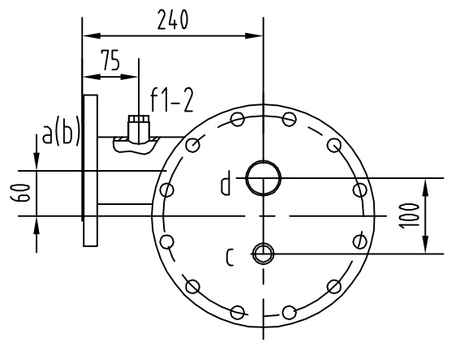

Table Of Pipe Connection				
No.	Intendedsize	Connection Standards	Joint face	Remart
a	PL80-1.6	HG20592-97	RF	Water Inlet
b	PL80-1.6	HG20592-97	RF	Water Outlet
c	Φ28 1-1/8"	/	welded	R22 Inlet
d	Φ54 2-1/8"	/	welded	R22 Outlet
e	Rc1/2	GB/T7306.2-2000	Internal thread	Drain
f1-2	Rc3/8	GB/T7306.2-2000	Internal thread	Senser

Design Parameter		
	Pipe Side	Shell Side
Design pressure MPa	1.4	1.0
Design Temperature ℃	38	60
Heat Exchange Area m^2	9.54	
Number Of Passes	2	1
Material	Q235-B、T2、20	
Pressure-Tight Test MPa	1.61	1.15

Design Standards
1.JB/T4750-2003《Specification for Refrigeration pressure vessel》
2.1999《safety-supervision regulation of pressure vessel》
3.JB/T4709-2000《Specification for steel pressure vessels》

DRAWING

U120S8

1:5